

STUDIO FRESNEL LED 150W

FRESNELS LED

Fresnels LED 150W built with aluminum profiles and steel, on modern and compact design, ensuring maximum dissipation and lightweight. Leds available for 3200K° or 5600K°, offering high colour rendering (CRI average >95),
Efficient optical system uses high quality reflector and fresnel lens glass to ensure maximum lighting performance. Saves up to 85% in energy consumption compared to halogen fresnels and a considerable reduction of heat emission.
The FRESNEL LED can be controlled via DMX from the console or manually by a potentiometer located on the control panel of the same fresnel Led. The control panel has an LCD and buttons to set the display DMX address, also select the type of DMX-Manual control, allowing display the percentage of light output and the LED voltage, as well as the temperature inside the equipment and its system electronic, and other parameters.
They are equipped with high quality drivers.
Flicker free, and noiseless turbine, to ensure maximum extension of the lifetime of the LED.
Available models Manual and Pole Operated.

MODELOS

SPL-150 Manual Operation
SPL-150/PO Pole Operation

- High power led 150W CRI ? 95.
- Colour temperature 5600Kº or 3200Kº.
- Full Flicker Free.
- Power requirements 110V-240V 50/60Hz.
- Control method: DMX or Local (manual) dimming.
- Powercom for power daisy chain.
- Fresnel lens Ø 150mm

DATOS FOTOMÉTRICOS

FRESNEL SPL-150

SPOT					
Distancia	4 mts	5 mts	6 mts	7 mts	8 mts
Center beam	5536 lux	3667 lux	2430 lux	1779 lux	1351 lux
Light beam diameter	1,30 mts	1,70 mts	1,90 mts	2,10 mts	2,50 mts
CCT	5780	5780	5780	5780	5780
CRI	92	92	92	92	92
Center beam	7134 lux	4490 lux	2970 lux	2230 lux	1660 lux
Light beam diameter	1,30 mts	1,70 mts	1,90 mts	2,10 mts	2,50 mts
CCT	3150	3150	3150	3150	3150
CRI	91,5	91,5	91,5	91,5	91,5

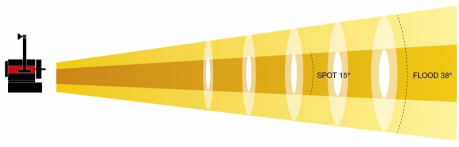

FLOOD					
Distancia	4 mts	5 mts	6 mts	7 mts	8 mts
Center beam	2225 lux	1450 lux	990 lux	750 lux	570 lux
Light beam diameter	2,60 mts	3,40 mts	3,90 mts	4,40 mts	5,00 mts
CCT	5980	5980	5980	5980	5980
CRI	92	92	92	92	92
Center beam	2725 lux	2225 lux	1210 lux	900 lux	700 lux
Light beam diameter	2,60 mts	3,40 mts	3,90 mts	4,40	5,00
CCT	3225	3225	3225	3225	3225
CRI	91,5	91,5	91,5	91,5	91,5

DIMENSIONES

L	301mm (11.85”)
W	305mm (12.00”)
H	480mm (18.89”)

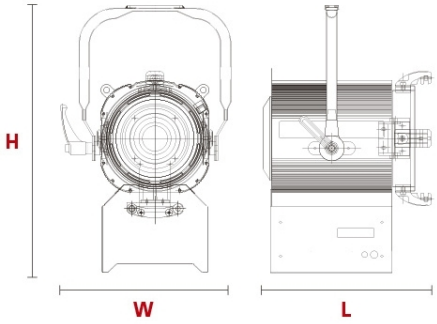

FORNECIDO COM:

- Barndoor 8-leaf.
- Colour frame.
- Safety grid.
- 2 m power supply cable