

STUDIO FRESNEL LED COMPACT 120W DMX SINGLE COLOR 3200K° O 5600K°

FRESNELS LED

Fresnels LED 120W built with aluminum profiles and steel, on modern and compact design, ensuring maximum dissipation and lightweight. Leds available for 3200K° or 5600K°, offering high colour rendering (CRI average >95),
Efficient optical system uses high quality reflector and fresnel lens glass to ensure maximum lighting performance. Saves up to 85% in energy consumption compared to halogen fresnels and a considerable reduction of heat emission.
The FRESNEL LED can be controlled via DMX from the console or manually by a potentiometer located on the control panel of the same fresnel Led. The control panel has an LCD and buttons to set the display DMX address, also select the type of DMX-Manual control, allowing display the percentage of light output and the LED voltage, as well as the temperature inside the equipment and its system electronic, and other parameters.
They are equipped with high quality drivers.
Flicker free, and noiseless turbine, to ensure maximum extension of the lifetime of the LED.
Available models Manual and Pole Operated.

MODELOS

53-20

- High efficient led 120W.
- Power consumption: 120W.
- Power requirements: 110V-240V 50/60Hz.
- Control method: Model 53-20/D: DMX or Local (manual) dimming.
- Colour temperature: 5600Kº or 3200Kº.
- Flicker Free.
- Fresnel lens Ø 120mm.
- Powercom for power daisy chain.
- Warranty 2 years

DATOS FOTOMÉTRICOS

FRESNEL 53-20 120W

SPOT					
Distancia	4 mts	5 mts	6 mts	7 mts	8 mts
Center beam	4300 lux	2650 lux	1870 lux	1390 lux	1049 lux
Light beam diameter	1,00 mts	1,50 mts	2,00 mts	2,50 mts	3,00 mts
CCT	5580	5580	5580	5580	5580
CRI	92	92	92	92	92
Center beam	5230 lux	3245 lux	2190 lux	1560 lux	1200 lux
Light beam diameter	1,00 mts	1,50 mts	2,00 mts	2,50 mts	3,00 mts
CCT	3100	3100	3100	3100	3100
CRI	93	93	93	93	93

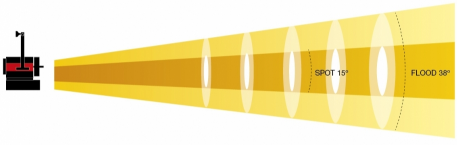

FLOOD					
Distancia	4 mts	5 mts	6 mts	7 mts	8 mts
Center beam	1710 lux	1080 lux	780 lux	580 lux	440 lux
Light beam diameter	2,20 mts	3,40 mts	4,30 mts	5,60 mts	6,50 mts
CCT	5800	5800	5800	5800	5800
CRI	91,5	91,5	91,5	91,5	91,5
Center beam	2000 lux	1280 lux	880 lux	650 lux	495 lux
Light beam diameter	2,20 mts	3,40 mts	4,30 mts	5,60	6,50
CCT	3198	3198	3198	3198	3198
CRI	93	93	93	93	93

DIMENSIONES

L	250mm (9.84")
W	200mm (7.87")
H	357mm (14.05")

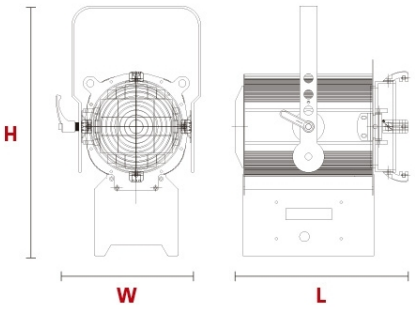

FORNECIDO COM:

- Barndoor 4-leaf.
- Colour frame.
- Safety grid.
- 2 m power supply cable.