FICHA TÉCNICA

www.dexel.com



LED ELLIPSOIDAL 250W RGBW ZOOM 25-50°

LED ELLIPSOIDAL 250W RGBW ZOOM 25-50°

LED Ellipsoidal Zoom RGBW 250W for theatre, events, display and architectural lighting applications. Offers several of selectable colors and allows to créate a lot of different stages and enviroments . It provides intense accent light output, with adjustable beam, framing shutters, gobo and iris. Bringing a lot of advantages as less power consumption and no dimmer circuits, no cost lamps replacements, and no cost for replacing filter colors. Delivers the performance of a 650w halogen ellipsoidal fixture.

DATOS FOTOMÉTRICOS

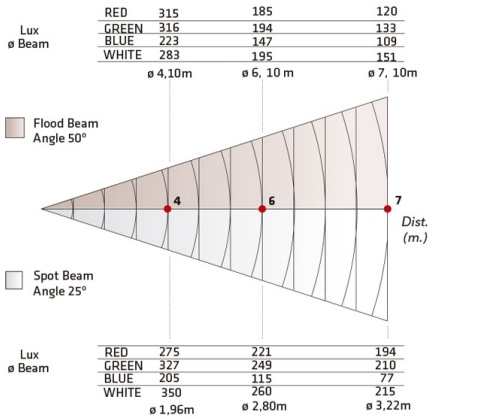

MODELOS

53-15RGBW 250W 25-50º

- No more lamps replacements
- No cost of filter colors
- No external dimmers required
- Low energy consume
- Less heat
- Long life of led source, 40000 hs
- Variabble beam angle 25° to 50°
- Thousands of color choice form the RGBW engine

FICHA TÉCNICA

www.dexel.com





DIMENSIONES

L	580mm (22.83")
W	376mm (14.8")
H	340mm (13.38")

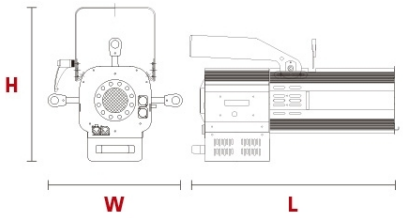

FORNECIDO COM:

-Four shutters
-Gobo holder
-Enable for using Iris diafragma (Optional)