

LED ELLIPSOIDAL 250W RGBW ZOOM 15-30°

LED ELLIPSOIDAL 250W RGBW ZOOM 15-30°

LED Ellipsoidal Zoom RGBW 250W for theatre, events, display and architectural lighting applications. Offers several of selectable colors and allows to créate a lot of different stages and enviroments . It provides intense accent light output, with adjustable beam, framing shutters, gobo and iris. Bringing a lot of advantages as less power consumption and no dimmer circuits, no cost lamps replacements, and no cost for replacing filter colors. Delivers the performance of a 650w halogen ellipsoidal fixture.

DATOS FOTOMÉTRICOS

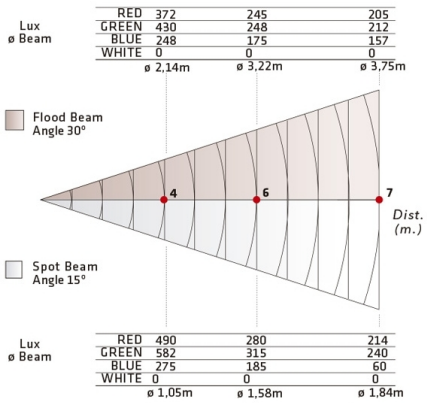

MODELOS

53-14RGBW 250W 15-30º

- No more lamps replacements
- No cost of filter colors
- No external dimmers required
- Low energy consume
- Less heat
- Long life of led source, 40000 hs
- Variabble beam angle 15° to 30°
- Thousands of color choice form the RGBW engine

FICHA TÉCNICA

www.dexel.com





DIMENSIONES

L	687mm (27.04")
W	376mm (14.8")
H	340mm (13.38")

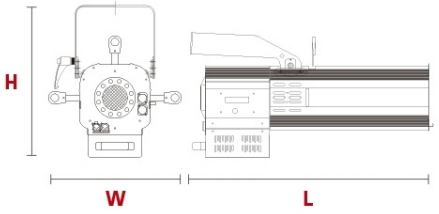

FORNECIDO COM:

-Four shutters
-Gobo holder
-Enable for using Iris diafragma (Optional)