FICHA TÉCNICA
www.dexel.com



FRESNEL LED 250W RGBW

FRESNELS LED

Fresnels LED 250W RGBW, built with aluminum profiles and steel, on modern and compact design, ensuring maximum dissipation and lightweight. High power RGBW Leds 250W allow to create several colors and effects for large areas.
Efficient optical system uses high quality reflector and glass fresnel lens 250mm diameter to ensure maximum lighting performance.
The FRESNEL LED can be controlled via DMX from the console or manually from the control panel on the same fresnel Led. The control panel has an LCD and buttons to set the display DMX address, as well as programming manual control. They are equipped with high quality drivers. Flicker free, and noiseless turbine, to ensure maximum extension of the lifetime of the LED.
Available models Manual and Pole Operated.

DATOS FOTOMÉTRICOS

FRESNEL 250W RGBW Modelo 53-29

Flood beam angle			
RED	175	120	96
GREEN	235	160	120
BLUE	75	60	45
WHITE	390	240	195
	ø 5 mts	ø 6 mts	ø 7 mts

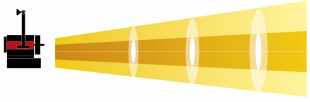

Spot beam angle			
RED	790	620	424
GREEN	1145	895	630
BLUE	310	250	175
WHITE	1850	1350	980
	ø 1.6 mts	ø 2 mts	ø 2.3 mts

MODELOS

SPL-250W RGBW

- Power tool to create full colour palette and effects.
- Ideal for lighting large areas.
- High power led 250W RGBW.
- Focus control for getting narrow and wide beam.
- Control panel DMX and Manual to select effects.
- Power consumption: 250W.
- Power requirements: 110V-240V 50/60Hz.
- Fresnel lens Ø 175mm.

FICHA TÉCNICA

www.dexel.com







DATOS FOTOMÉTRICOS

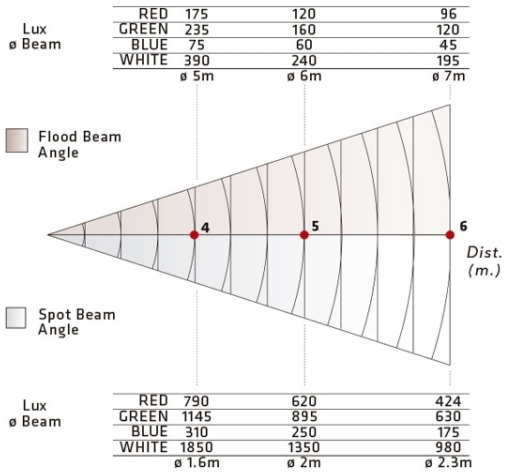

DIMENSIONES

L 350mm (13.77")

W 447mm (17.59")

H 611mm (24.05")

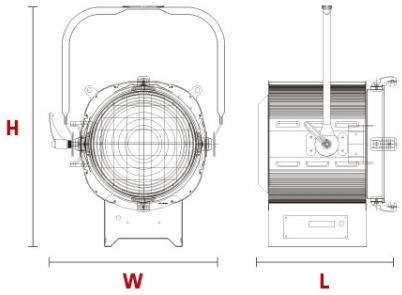

FORNECIDO COM:

- Barndoor 4-leaf.
- Filter frame.
- Safety grid.
- 2 m power supply cable.