DATASHEET
www.dexel.com



COLOR MAX PRO WASHER RGBW 24 LEDS x 10W

PRO WASHER LED RGBW

COLOR MAX LED WASHER are compact and high power led lighting fixtures, offering an attractive and modern design. COLOR MAX brings a wide range of tools to create every lighting needs on stage and architectural applications. Provides a large RGBW full colour palette, from deep colours to soft pastels, all from a single fixture. Available models for 24 or 48 pcs 10W power leds 4 in 1 RGBW, with highly efficient optical system. Powered by high quality electronic control and Mean Well® power supplies for offering a reliable equipment. DMX and Manual control, easy to operate with a comprehensive built-in effects engine. 100 - 240 volts.

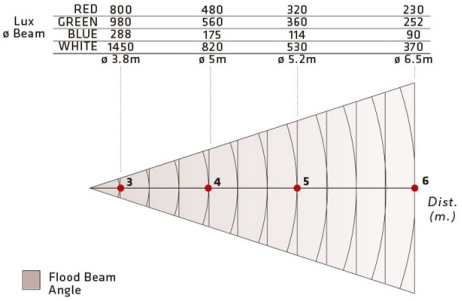

MODELS

53-54
24 leds 10W 4 in 1 RGBW

- Provides full colour palette RGBW.
- Models for 24 or 48 10W Power leds 4 in 1.
- DMX & Manual control, built-in programs.
- Attractive style and design

L	136mm (5.35")
W	552mm (21.73")
H	281mm (11.06")

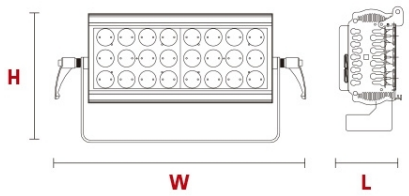

SUPPLIED WITH:

- Filter frame.
- Power cable 2 mts